LUMOS

Pressurized Glycol System with Secondary Backup Tank

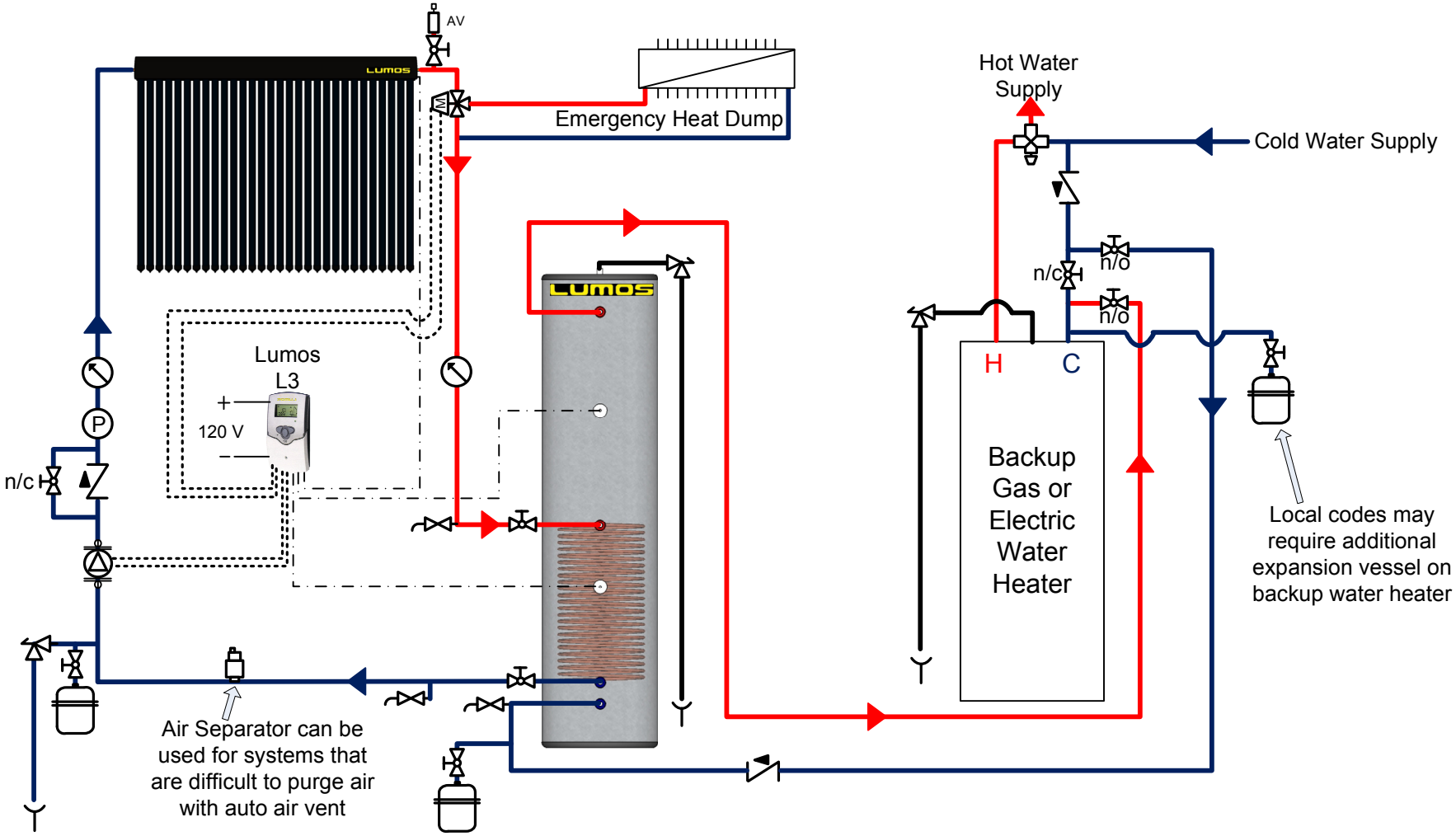

- Circuit Setter (Flow Control)
- Pressure Gauge
- Temperature Gauge
- Drain/Fill Valve
- Air Separator
- Motorized Control Valve (3 way)
- Auto Air Vent
- Isolation Valve
- Flow Check
- Vacuum Breaker
- Anti-Scald Valve
- Sight Glass/Flow Meter
- Pump
- Pump w/ Isolation Flanges
- Drain
- Aquastat (Setpoint Control)
- T & P Relief Valve
- Expansion Vessel
- Drain Back Tank
- Sensor wire
- Electrical Wire